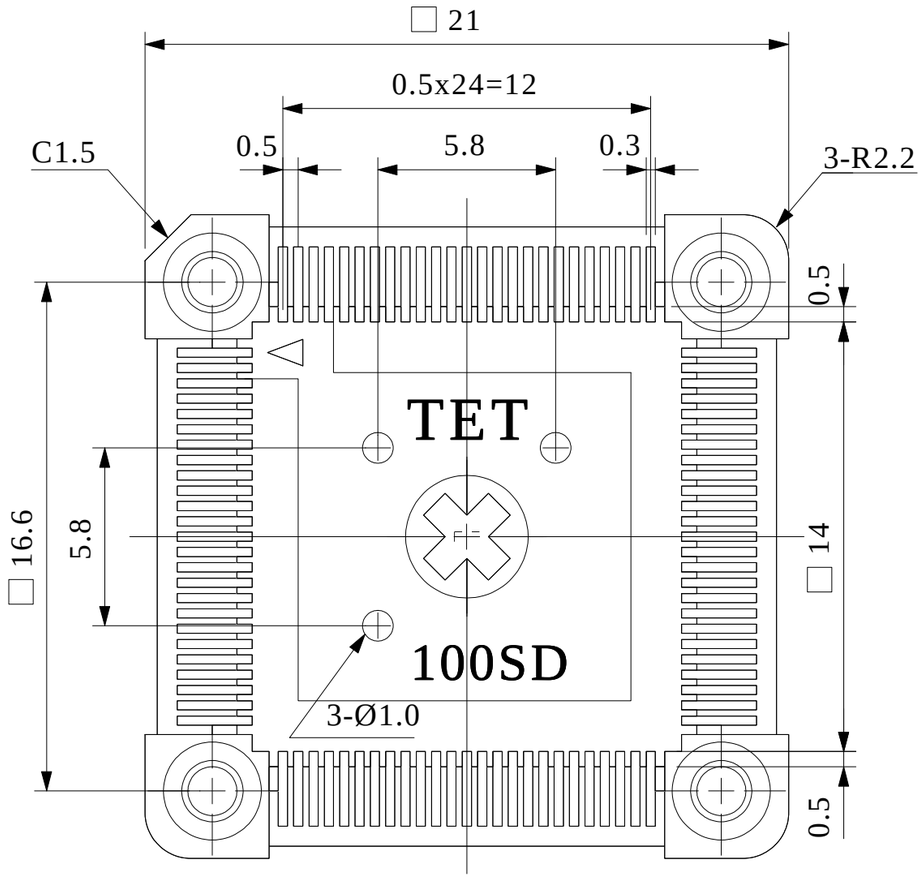

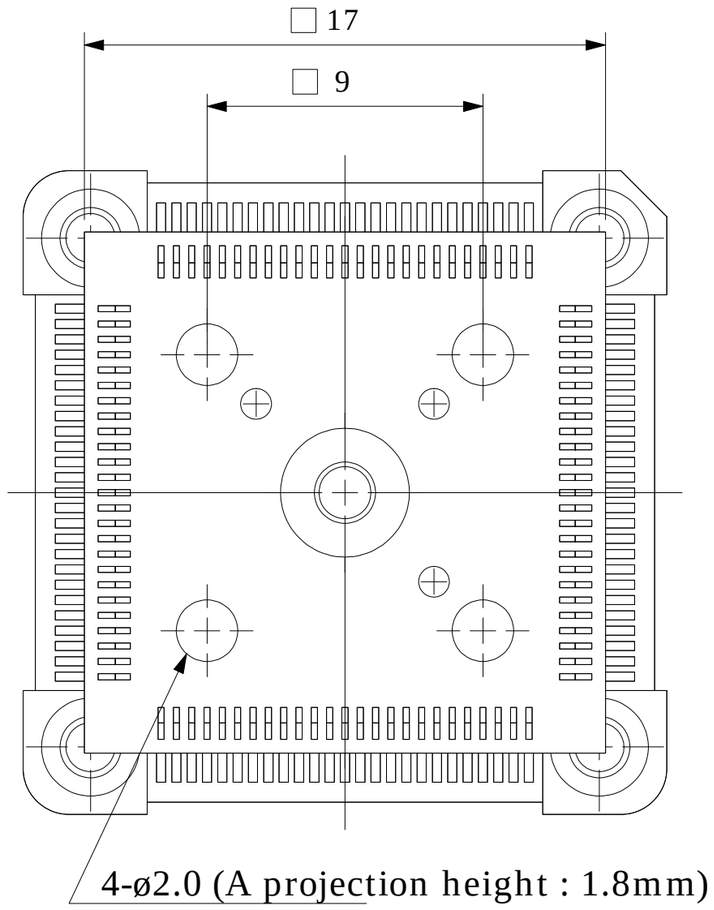

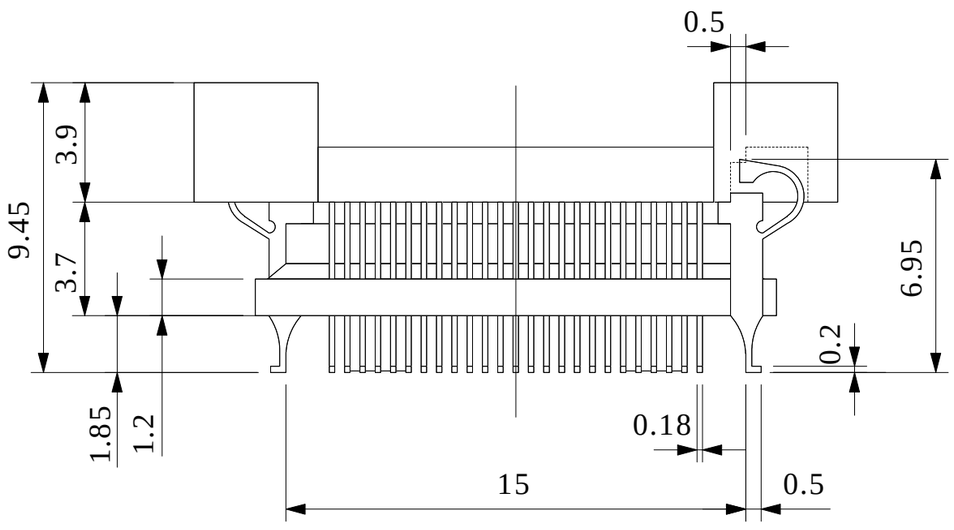

Part No.	100GC-NQ-01T
IC package	Square
Pin count	100Pin
Lead pitch	0.5mm
Unit : mm	Design :